SALES DRAWING SALES DRAWING

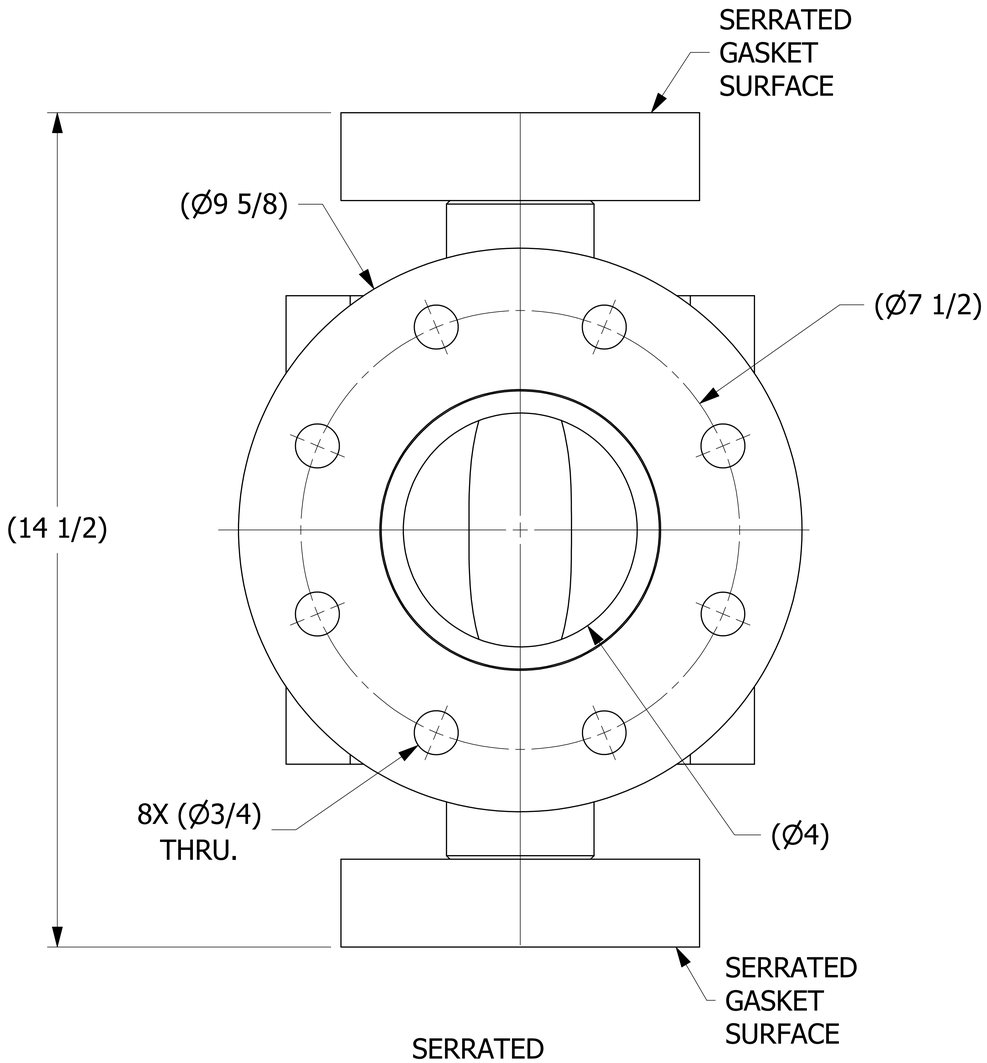

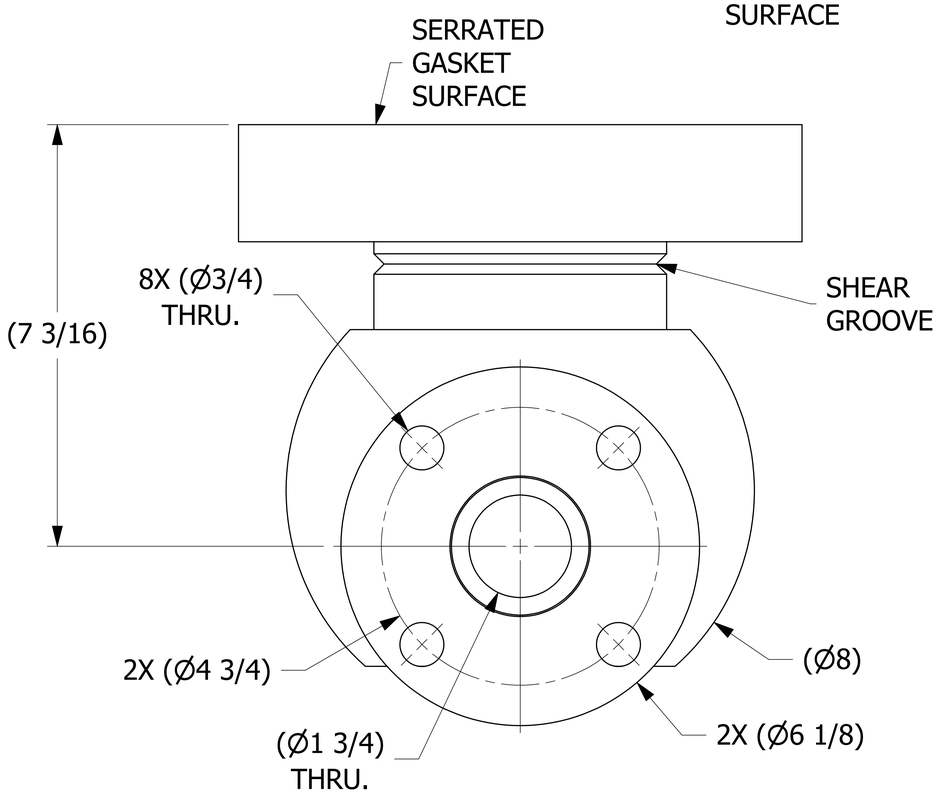

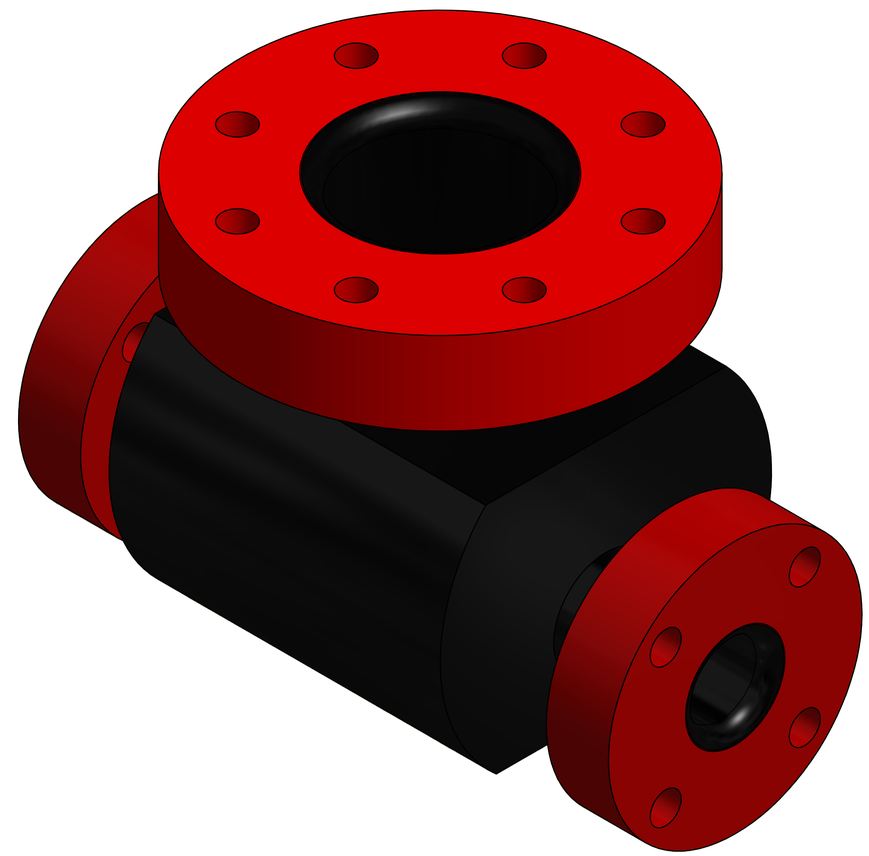

NOTE:
SOLD TO WORLEY WELDING ONLY.

REV	BY	DATE	DESCRIPTION
C	WEB	12-03-12	REPLACED PART HS2X4PTB1 WITH HS2X4PTB2 UPDATED DIMENSIONS AND BOM
B	GDS	8-14-12	UPDATED VIEWS
A	BG	7-13-12	NEW PART ADDED TO THE NETWORK

UNLESS OTHERWISE SPECIFIED
DIMENSIONAL TOLERANCES
FRACTIONAL: ±1/16
X.XX: ±.03
X.XXX: ±.015
ANGULAR: ±1°
DEBURR ALL SHARP EDGES.
ALL MACHINED SURFACES TO HAVE A 125 RMS FINISH UNLESS NOTED OTHERWISE.
THIRD ANGLE PROJECTION

DRAWN BY:	JJK
CHECKED BY:	CHL
PROTOTYPE BY:	JJK
PROTOTYPE DATE:	3/29/2012
APPROVED FOR PRODUCTION BY:	CHL
PRODUCTION DATE:	7/13/2012

SALCO PRODUCTS, INC.

PART NAME: PIPE TEE 2"X4"

MATERIAL: SALCO PE

PROJECT #: 120331 | SHEET #: 1 OF 1 | SCALE: 1:1

DRAWING #: E32865 | PART #: HS2X4PT1

THIS PRINT, PROPERTY OF SALCO PRODUCTS INC, CONTAINS PROPRIETARY INFORMATION AND MUST NOT BE COPIED, REPRODUCED, OR USED DETRIMENTALLY TO OUR INTEREST.

SALES DRAWING SALES DRAWING